LINOVECTOR II

Submittal

LV4-S14 20 24
Copper/Aluminum and
Steel Element Ratings

☐ **LV4 Slip Jointed Enclosure**

Specification

ENCLOSURE:

STYLE: Slope Top, Slope Outlet
OUTLET: Stamped Louvers
Pencil Proof

LENGTHS: 2'0" thru 8'0" in 6" Increments
MAT'L:
☐ 18 Ga. CRS (Std)
☐ 16 Ga. CRS (Opt'l)
☐ 14 Ga. CRS (Opt'l)
☐ 18 Ga. Stainless Steel (Opt'l)
☐ 16 Ga. Stainless Steel (Opt'l)
☐ 14 Ga. Stainless Steel (Opt'l)
☐ 16 Ga. Aluminum (Opt'l)
☐ 14 Ga. Aluminum (Opt'l)
☐ 12 Ga. Aluminum (Opt'l)
HEIGHT:
☐ 14"
☐ 20"
☐ 24"
FINISH:
☐ Baked Powder (Std)
☐ Baked Metallic (Opt'l)

ACCESSORIES:

☐ LV Overlapping Type
All accessories return to the wall at the bottom and have pre-punched holes for fastening to the wall.

☐ LV4-S14 20 24

ELEMENT TUBE SIZE	FIN SIZE HEIGHT x WIDTH	CRADLE NUMBER	A
3/4 COPPER	3 5/8 x 4 1/4	2	7"
3/4 COPPER	4 1/4 x 4 1/4	3A	7 3/8
1" COPPER	3 5/8 x 4 1/4	2	7 3/16
1" COPPER	4 1/4 x 4 1/4	2	7 3/16
1 1/4 COPPER	3 5/8 x 4 1/4	2	7 5/16
1 1/4 COPPER	4 1/4 x 4 1/4	2	7 5/16
1" STEEL	4 1/4 x 4 1/4	2	7 5/16
1 1/4 STEEL	4 1/4 x 4 1/4	2	7 1/2
2" STEEL	4 1/4 x 4 1/4	1	7 1/4

ELEMENT:

TYPE: ☐ Cu/AL (Mechanically Expanded)
LENGTHS: 2'0" thru 12'6" in 1" Increments for 1" & 1-1/4" Cu.
2'0" thru 8'0" in 1" Increments for 3/4" Cu.

One End Flared (Std)

TYPE: ☐ IPS Steel (Mechanically Expanded)
LENGTHS: 2'0" thru 12'6" in 1" Increments
☐ NPT Thread both Ends (Std)
☐ Beveled Ends for Field Weld (Opt'l)

See Catalog for Working Pressures

BACKPLATE:

TYPE: ☐ Partial B/P
LENGTHS: 8'0" Only
MAT'L:
☐ 20 Ga. Prepainted (Std)
☐ 18 Ga. Galvannealed (Opt'l)

TYPE: ☐ Full Ht. B/P (Opt'l)
LENGTHS: 2'0" thru 8'0" in 6" Increments
MAT'L:
☐ 20 Ga. Galvannealed (Opt'l)
☐ 20 Ga. Painted (Opt'l)
☐ 18 Ga. Painted (Opt'l)

AIRSEAL:

☐ 1/8" x 3/8" Closed Cell (Opt'l)

BRACKETS:

☐ Water Brkt w/B.B.
☐ Steam Brkt w/Brkt Mtd B.B. Hgr

DAMPER:

Damper Blades Factory Installed
☐ Knob Damper (Opt'l)
☐ Tamper Resistant (Opt'l)

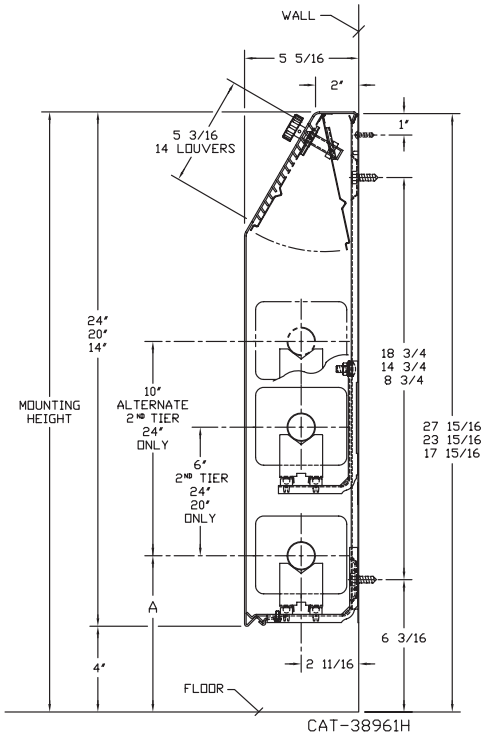

Vulcan RADIATOR
260 North Elm St., Westfield, MA 01085
(413) 568-9571 Fax: (413) 564-5661
www.vulcanrad.com

10/22

PROJECT: _____ **DATE:** _____
LOCATION: _____
ARCHITECT: _____
ENGINEER: _____
CONTRACTOR: _____
PO NUMBER: _____

STYLE “LV4-S14 20 24” LINOVECTOR II

COPPER/ALUMINUM ELEMENTS

ALL RATINGS ARE IN BTU/HR/LIN FT AND BASED ON 3 FPS VELOCITY, 65° EAT

TUBE SIZE	CATALOG DESIGNATION	FIN SIZE HEIGHT X WIDTH	FINS PER FT.	FIN THICKNESS IN INCHES	ENCL HEIGHT IN INCHES	TIERS AND CENTERS IN INCHES	MOUNTING HEIGHT IN INCHES	STEAM 215° FACTOR	HOT WATER (AVG.) 200°	190°	180°	170°	160°	150°	140°	130°	120°
									CORRECTION FACTORS FOR AVERAGE WATER TEMPERATURES								
								1.00	0.86	0.78	0.69	0.61	0.53	0.45	.40	.33	.26
3/4"	VC3/4-433	3-5/8" x 4-1/4"	32	.020	14	1	18	1520	1310	1190	1050	930	810	680	610	500	400
					20	1	24	1600	1380	1250	1100	980	850	720	640	530	420
					20	2-6 CL	24	2480	2130	1930	1710	1510	1310	1120	990	820	640
					24	1	28	1670	1440	1300	1150	1020	890	750	670	550	430
					24	2-6 CL	28	2570	2210	2000	1770	1570	1360	1160	1030	850	670
					24	3-6 CL	28	2960	2550	2310	2040	1810	1570	1330	1180	980	770
3/4"	VC3/4-434	3-5/8" x 4-1/4"	40	.020	14	1	18	1700	1460	1330	1170	1040	900	770	680	560	440
					20	1	24	1820	1570	1420	1260	1110	960	820	730	600	470
					20	2-6 CL	24	2580	2220	2010	1780	1570	1370	1160	1030	850	670
					24	1	28	1910	1640	1490	1320	1170	1010	860	760	630	500
					24	2-6 CL	28	2700	2320	2110	1860	1650	1430	1220	1080	890	700
					24	3-6 CL	28	3080	2650	2400	2130	1880	1630	1390	1230	1020	800
3/4"	VC3/4-435	3-5/8" x 4-1/4"	50	.020	14	1	18	1840	1580	1440	1270	1120	980	830	740	610	480
					20	1	24	2090	1800	1630	1440	1270	1110	940	840	690	540
					20	2-6 CL	24	2820	2430	2200	1950	1720	1490	1270	1130	930	730
					24	1	28	2260	1940	1760	1560	1380	1200	1020	900	750	590
					24	2-6 CL	28	3110	2670	2430	2150	1900	1650	1400	1240	1030	810
					24	3-6 CL	28	3510	3020	2740	2420	2140	1860	1580	1400	1160	910
1"	VC433	3-5/8" x 4-1/4"	32	.020	14	1	18	1540	1320	1200	1060	940	820	690	620	510	400
					20	1	24	1620	1390	1260	1120	990	860	730	650	530	420
					20	2-6 CL	24	2500	2150	1950	1720	1530	1330	1130	1000	830	650
					24	1	28	1690	1450	1320	1170	1030	900	760	680	560	440
					24	2-6 CL	28	2590	2230	2020	1790	1580	1370	1170	1040	850	670
					24	3-6 CL	28	2980	2560	2320	2060	1820	1580	1340	1190	980	770
1"	VC434	3-5/8" x 4-1/4"	40	.020	14	1	18	1780	1530	1390	1230	1090	940	800	710	590	460
					20	1	24	1900	1630	1480	1310	1160	1010	860	760	630	490
					20	2-6 CL	24	2660	2290	2070	1840	1620	1410	1200	1060	880	690
					24	1	28	1990	1710	1550	1370	1210	1050	900	800	660	520
					24	2-6 CL	28	2770	2380	2160	1910	1690	1470	1250	1110	910	720
					24	3-6 CL	28	3160	2720	2460	2180	1930	1670	1420	1260	1040	820
1"	VC435	3-5/8" x 4-1/4"	50	.020	14	1	18	1930	1660	1510	1330	1180	1020	870	770	640	500
					20	1	24	2180	1870	1700	1500	1330	1160	980	870	720	570
					20	2-6 CL	24	2640	2270	2060	1820	1610	1400	1190	1060	870	690
					24	1	28	2360	2030	1840	1630	1440	1250	1060	940	780	610
					24	2-6 CL	28	2910	2500	2270	2010	1780	1540	1310	1160	960	760
					24	3-6 CL	28	3290	2830	2570	2270	2010	1740	1480	1320	1090	860
1-1/4"	VC1433	3-5/8" x 4-1/4"	32	.020	14	1	18	1450	1250	1130	1000	880	770	650	580	480	380
					20	1	24	1530	1320	1190	1060	930	810	690	610	500	400
					20	2 @ 6 CL	24	2360	2030	1840	1630	1440	1250	1060	940	780	610
					24	1	28	1590	1370	1240	1100	970	840	720	640	520	410
					24	2 @ 6 CL	28	2450	2110	1910	1690	1490	1300	1100	980	810	640
					24	3 @ 6 CL	28	2820	2430	2200	1950	1720	1490	1270	1130	930	730
1-1/4"	VC1434	3-5/8" x 4-1/4"	40	.020	14	1	18	1740	1500	1360	1200	1060	920	780	700	570	450
					20	1	24	1880	1620	1470	1300	1150	1000	850	750	620	490
					20	2 @ 6 CL	24	2610	2240	2040	1800	1590	1380	1170	1040	860	680
					24	1	28	1950	1680	1520	1350	1190	1030	880	780	640	510
					24	2 @ 6 CL	28	2710	2330	2110	1870	1650	1440	1220	1080	890	700
					24	3 @ 6 CL	28	3090	2660	2410	2130	1880	1640	1390	1240	1020	800
1-1/4"	VC1435	3-5/8" x 4-1/4"	50	.020	14	1	18	1860	1600	1450	1280	1130	990	840	740	610	480
					20	1	24	2130	1830	1660	1470	1300	1130	960	850	700	550
					20	2 @ 6 CL	24	2510	2160	1960	1730	1530	1330	1130	1000	830	650
					24	1	28	2270	1950	1770	1570	1380	1200	1020	910	750	590
					24	2 @ 6 CL	28	2810	2420	2190	1940	1710	1490	1260	1120	930	730
					24	3 @ 6 CL	28	3180	2730	2480	2190	1940	1690	1430	1270	1050	830

STYLE "LV4-S14 20 24" LINOVECTOR II

COPPER/ALUMINUM ELEMENTS

ALL RATINGS ARE IN BTU/HR/LIN FT AND BASED ON 3 FPS VELOCITY, 65° EAT

TUBE SIZE	CATALOG DESIGNATION	FIN SIZE HEIGHT X WIDTH	FINS PER FT.	FIN THICKNESS IN INCHES	ENCL HEIGHT IN INCHES	TIERS AND CENTERS IN INCHES	MOUNTING HEIGHT IN INCHES	STEAM 215° FACTOR	HOT WATER (AVG.) 200°	190°	180°	170°	160°	150°	140°	130°	120°
									CORRECTION FACTORS FOR AVERAGE WATER TEMPERATURES								
								1.00	0.86	0.78	0.69	0.61	0.53	0.45	.40	.33	.26
3/4"	VC3/4-43	4-1/4" SQ.	32	.020	14	1	18	1630	1400	1270	1120	990	860	730	650	540	420
					20	1	24	1720	1480	1340	1190	1050	910	770	690	570	450
					20	2-6 CL	24	2630	2260	2050	1810	1600	1390	1180	1050	870	680
					24	1	28	1790	1540	1400	1240	1090	950	810	720	590	470
					24	2-6 CL	28	2810	2420	2190	1940	1710	1490	1260	1120	930	730
					24	3-6 CL	28	3230	2780	2520	2230	1970	1710	1450	1290	1070	840
3/4"	VC3/4-44	4-1/4" SQ.	40	.020	14	1	18	2030	1750	1580	1400	1240	1080	910	810	670	530
					20	1	24	2210	1900	1720	1520	1350	1170	990	880	730	570
					20	2-6 CL	24	2930	2520	2290	2020	1790	1550	1320	1170	970	760
					24	1	28	2350	2020	1830	1620	1430	1250	1060	940	780	610
					24	2-6 CL	28	3210	2760	2500	2210	1960	1700	1440	1280	1060	830
					24	3-6 CL	28	3660	3150	2850	2530	2230	1940	1650	1460	1210	950
3/4"	VC3/4-45	4-1/4" SQ.	50	.020	14	1	18	2040	1750	1590	1410	1240	1080	920	820	670	530
					20	1	24	2320	2000	1810	1600	1420	1230	1040	930	770	600
					20	2-6 CL	24	3070	2640	2390	2120	1870	1630	1380	1230	1010	800
					24	1	28	2470	2120	1930	1700	1510	1310	1110	990	820	640
					24	2-6 CL	28	3270	2810	2550	2260	1990	1730	1470	1310	1080	850
					24	3-6 CL	28	3700	3180	2890	2550	2260	1960	1670	1480	1220	960
1"	VC43	4-1/4" SQ.	32	.020	14	1	18	1650	1420	1290	1140	1010	870	740	660	540	430
					20	1	24	1740	1500	1360	1200	1060	920	780	700	570	450
					20	2-6 CL	24	2590	2230	2020	1790	1580	1370	1170	1040	850	670
					24	1	28	1810	1560	1410	1250	1100	960	810	720	600	470
					24	2-6 CL	28	2830	2430	2210	1950	1730	1500	1270	1130	930	740
					24	3-6 CL	28	3250	2800	2540	2240	1980	1720	1460	1300	1070	850
1"	VC44	4-1/4" SQ.	40	.020	14	1	18	1880	1620	1470	1300	1150	1000	850	750	620	490
					20	1	24	2040	1750	1590	1410	1240	1080	920	820	670	530
					20	2-6 CL	24	2690	2310	2100	1860	1640	1430	1210	1080	890	700
					24	1	28	2140	1840	1670	1480	1310	1130	960	860	710	560
					24	2-6 CL	28	2920	2510	2280	2010	1780	1550	1310	1170	960	760
					24	3-6 CL	28	3330	2860	2600	2300	2030	1760	1500	1330	1100	870
1"	VC45	4-1/4" SQ.	50	.020	14	1	18	2060	1770	1610	1420	1260	1090	930	820	680	540
					20	1	24	2340	2010	1830	1610	1430	1240	1050	940	770	610
					20	2-6 CL	24	2680	2300	2090	1850	1630	1420	1210	1070	880	700
					24	1	28	2510	2160	1960	1730	1530	1330	1130	1000	830	650
					24	2-6 CL	28	3000	2580	2340	2070	1830	1590	1350	1200	990	780
					24	3-6 CL	28	3390	2920	2640	2340	2070	1800	1530	1360	1120	880
1-1/4"	VC143	4-1/4" SQ.	32	.020	14	1	18	1620	1390	1260	1120	990	860	730	650	530	420
					20	1	24	1710	1470	1330	1180	1040	910	770	680	560	440
					20	2-6 CL	24	2540	2180	1980	1750	1550	1350	1140	1020	840	660
					24	1	28	1770	1520	1380	1220	1080	940	800	710	580	460
					24	2-6 CL	28	2780	2390	2170	1920	1700	1470	1250	1110	920	720
					24	3-6 CL	28	3200	2750	2500	2210	1950	1700	1440	1280	1060	830
1-1/4"	VC144	4-1/4" SQ.	40	.020	14	1	18	1850	1590	1440	1280	1130	980	830	740	610	480
					20	1	24	2000	1720	1560	1380	1220	1060	900	800	660	520
					20	2-6 CL	24	2640	2270	2060	1820	1610	1400	1190	1060	870	690
					24	1	28	2100	1810	1640	1450	1280	1110	950	840	690	550
					24	2-6 CL	28	2870	2470	2240	1980	1750	1520	1290	1150	950	750
					24	3-6 CL	28	3270	2810	2550	2260	1990	1730	1470	1310	1080	850
1-1/4"	VC145	4-1/4" SQ.	50	.020	14	1	18	2020	1740	1580	1390	1230	1070	910	810	670	530
					20	1	24	2300	1980	1790	1590	1400	1220	1040	920	760	600
					20	2-6 CL	24	2630	2260	2050	1810	1600	1390	1180	1050	870	680
					24	1	28	2470	2120	1930	1700	1510	1310	1110	990	820	640
					24	2-6 CL	28	2950	2540	2300	2040	1800	1560	1330	1180	970	770
					24	3-6 CL	28	3330	2860	2600	2300	2030	1760	1500	1330	1100	870

Note: Copper tube furnished flared one end standard.

STYLE "LV4-S14 20 24" LINOVECTOR II

STEEL ELEMENTS

ALL RATINGS ARE IN BTU/HR/LIN FT AND BASED ON 3 FPS VELOCITY, 65° EAT

TUBE SIZE	CATALOG DESIGNATION	FIN SIZE HEIGHT X WIDTH	FINS PER FT.	FIN THICKNESS IN INCHES	ENCL HEIGHT IN INCHES	TIERS AND CENTERS IN INCHES	MOUNTING HEIGHT IN INCHES	STEAM 215° FACTOR	HOT WATER (AVG.) 200°	190°	180°	170°	160°	150°	140°	130°	120°
									CORRECTION FACTORS FOR AVERAGE WATER TEMPERATURES								
								1.00	0.86	0.78	0.69	0.61	0.53	0.45	.40	.33	.26
1"	VS43	4-1/4" SQ.	32	.032	14	1	18	1410	1210	1100	970	860	750	630	560	470	370
					20	1	24	1460	1260	1140	1010	890	770	660	580	480	380
					20	2-6 CL	24	2200	1890	1720	1520	1340	1170	990	880	730	570
					24	1	28	1500	1290	1170	1040	920	800	680	600	500	390
					24	2-6 CL	28	2270	1950	1770	1570	1380	1200	1020	910	750	590
					24	3-6 CL	28	2610	2240	2040	1800	1590	1380	1170	1040	860	680
1"	VS44	4-1/4" SQ.	40	.032	14	1	18	1580	1360	1230	1090	960	840	710	630	520	410
					20	1	24	1680	1440	1310	1160	1020	890	760	670	550	440
					20	2-6 CL	24	2380	2050	1860	1640	1450	1260	1070	950	790	620
					24	1	28	1740	1500	1360	1200	1060	920	780	700	570	450
					24	2-6 CL	28	2490	2140	1940	1720	1520	1320	1120	1000	820	650
					24	3-6 CL	28	2840	2440	2220	1960	1730	1510	1280	1140	940	740
1"	VS45	4-1/4" SQ.	50	.032	14	1	18	1655	1420	1290	1140	1010	880	740	660	550	430
					20	1	24	1760	1510	1370	1210	1070	930	790	700	580	460
					20	2-6 CL	24	2435	2090	1900	1680	1490	1290	1100	970	800	630
					24	1	28	1825	1570	1420	1260	1110	970	820	730	600	470
					24	2-6 CL	28	2550	2190	1990	1760	1560	1350	1150	1020	840	660
					24	3-6 CL	28	2880	2480	2250	1990	1760	1530	1300	1150	950	750
1-1/4"	VS143	4-1/4" SQ.	32	.032	14	1	18	1300	1120	1010	900	790	690	590	520	430	340
					20	1	24	1340	1150	1050	920	820	710	600	540	440	350
					20	2-6 CL	24	2020	1740	1580	1390	1230	1070	910	810	670	530
					24	1	28	1380	1190	1080	950	840	730	620	550	460	360
					24	2-6 CL	28	2080	1790	1620	1440	1270	1100	940	830	690	540
					24	3-6 CL	28	2390	2060	1860	1650	1460	1270	1080	960	790	620
1-1/4"	VS144	4-1/4" SQ.	40	.032	14	1	18	1570	1350	1220	1080	960	830	710	630	520	410
					20	1	24	1670	1440	1300	1150	1020	890	750	670	550	430
					20	2-6 CL	24	2370	2040	1850	1640	1450	1260	1070	950	780	620
					24	1	28	1730	1490	1350	1190	1060	920	780	690	570	450
					24	2-6 CL	28	2480	2130	1930	1710	1510	1310	1120	990	820	640
					24	3-6 CL	28	2830	2430	2210	1950	1730	1500	1270	1130	930	740
1-1/4"	VS145	4-1/4" SQ.	50	.032	14	1	18	1645	1410	1280	1140	1000	870	740	660	540	430
					20	1	24	1750	1510	1370	1210	1070	930	790	700	580	460
					20	2-6 CL	24	2390	2060	1860	1650	1460	1270	1080	960	790	620
					24	1	28	1810	1560	1410	1250	1100	960	810	720	600	470
					24	2-6 CL	28	2500	2150	1950	1720	1530	1330	1130	1000	830	650
					24	3-6 CL	28	2820	2430	2200	1950	1720	1490	1270	1130	930	730
2"	VS242	4-1/4" SQ.	25	.032	14	1	18	1200	1030	940	830	730	640	540	480	400	310
					20	1	24	1230	1060	960	850	750	650	550	490	410	320
					20	2-6 CL	24	1930	1660	1510	1330	1180	1020	870	770	640	500
					24	1	28	1250	1080	980	860	760	660	560	500	410	330
					24	2-6 CL	28	1940	1670	1510	1340	1180	1030	870	780	640	500
					24	3-6 CL	28	2230	1920	1740	1540	1360	1180	1000	890	740	580
2"	VS243	4-1/4" SQ.	32	.032	14	1	18	1400	1200	1090	970	850	740	630	560	460	360
					20	1	24	1450	1250	1130	1000	880	770	650	580	480	380
					20	2-6 CL	24	2110	1810	1650	1460	1290	1120	950	840	700	550
					24	1	28	1490	1280	1160	1030	910	790	670	600	490	390
					24	2-6 CL	28	2180	1870	1700	1500	1330	1160	980	870	720	570
					24	3-6 CL	28	2510	2160	1960	1730	1530	1330	1130	1000	830	650

Notes: 1) Steel fins furnished as .032 thick, painted black.
2) NPT threads furnished on steel elements. Please use domestic fittings for proper installation.
3) The ends can be provided chamfered for field welded fittings when specified.

Steam Bracket and BB Hanger

ELEMENT TUBE SIZE	FIN SIZE HEIGHT x WIDTH	CRADLE NUMBER	A MIN	A MAX
3/4 COPPER	3 5/8 x 4 1/4	2	7 3/8	8 3/4
	4 1/4 x 4 1/4	3A	7 11/16	9 1/16
1" COPPER	3 5/8 x 4 1/4	2	7 1/2	8 7/8
	4 1/4 x 4 1/4			
1 1/4 COPPER	3 5/8 x 4 1/4	2	7 5/8	9"
	4 1/4 x 4 1/4			
1" STEEL	4 1/4 x 4 1/4	2	7 5/8	9"
1 1/4 STEEL	4 1/4 x 4 1/4	2	7 7/8	9 1/4
2" STEEL	4 1/4 x 4 1/4	1	7 5/8	9"

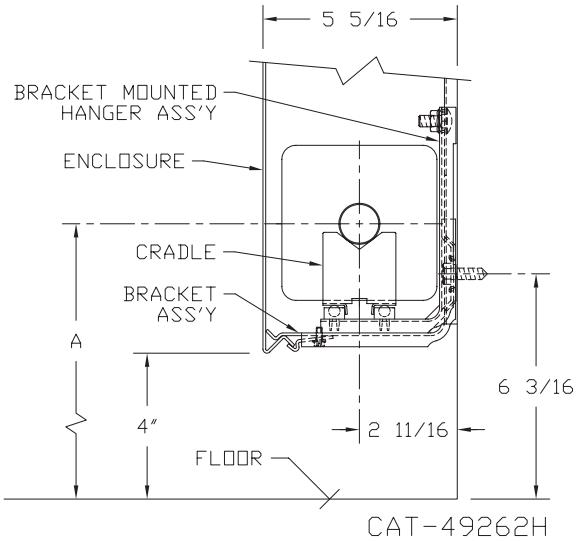

Design Data

COMMERCIAL FINNED TUBE CHARTS FOR RATING CORRECTIONS

For assistance with ratings and selection, please use our online Specifier.

CORRECTION FACTORS FOR WATER TEMPERATURES AND AIR TEMPERATURES OTHER THAN STANDARD

AVERAGE WATER TEMP. °F	ENTERING AIR TEMPERATURE °F														
	45	55	STD 65	70	75	80	85	90	95	100	110	120	130	140	150
90	.19	.13	.11	.06											
100	.25	.19	.15	.11	.08	.06									
110	.31	.25	.20	.16	.13	.11	.08	.06							
120	.38	.31	.26	.21	.19	.16	.13	.11	.08	.06					
130	.45	.38	.33	.28	.25	.21	.19	.16	.13	.11	.06				
140	.53	.45	.40	.34	.31	.28	.25	.21	.19	.16	.11	.06			
150	.61	.53	.45	.41	.38	.34	.31	.28	.25	.21	.16	.11	.06		
160	.69	.61	.53	.49	.45	.41	.38	.34	.31	.28	.21	.16	.11	.06	
170	.77	.69	.61	.57	.53	.49	.45	.41	.38	.34	.28	.21	.16	.11	.06
180	.86	.77	.69	.65	.61	.57	.53	.49	.45	.41	.34	.28	.21	.16	.11
190	.95	.86	.78	.73	.69	.65	.61	.57	.53	.49	.41	.34	.28	.21	.16
200	1.05	.95	.86	.82	.77	.73	.69	.65	.61	.57	.49	.41	.34	.28	.21
210	1.14	1.05	.95	.91	.86	.82	.77	.73	.69	.65	.57	.49	.41	.34	.28
▶ 215 (STD.)	1.19	1.09	1.00	.95	.91	.86	.82	.77	.73	.69	.61	.53	.45	.38	.31
220	1.24	1.14	1.05	1.00	.95	.91	.86	.82	.77	.73	.65	.57	.49	.41	.34
230	1.34	1.24	1.14	1.09	1.05	1.00	.95	.91	.86	.82	.73	.65	.57	.49	.41
240	1.44	1.34	1.25	1.19	1.14	1.09	1.05	1.00	.95	.91	.82	.73	.65	.57	.49
250	1.55	1.44	1.34	1.29	1.24	1.19	1.14	1.09	1.05	1.00	.91	.82	.73	.65	.57
260	1.66	1.55	1.44	1.39	1.34	1.29	1.24	1.19	1.14	1.09	1.00	.91	.82	.73	.65
270	1.76	1.66	1.55	1.50	1.44	1.39	1.34	1.29	1.24	1.19	1.09	1.00	.91	.82	.73
280	1.87	1.76	1.66	1.60	1.55	1.50	1.44	1.39	1.34	1.29	1.19	1.09	1.00	.91	.82
290	1.99	1.87	1.76	1.71	1.66	1.60	1.55	1.50	1.44	1.39	1.29	1.19	1.09	1.00	.91
300	2.10	1.99	1.87	1.82	1.76	1.71	1.66	1.60	1.55	1.50	1.39	1.29	1.19	1.09	1.00

CORRECTION FACTORS FOR STEAM PRESSURES AND AIR TEMPERATURES OTHER THAN STANDARD

STEAM PRESSURE		ENTERING AIR TEMPERATURE °F														
GAUGE	ABS. PSI	TEMP. °F	45	55	STD 65	70	75	80	85	90	100	110	120	130	140	150
(VAC) 15" HG	7.32	178.9	0.90	0.80	0.70	0.65	0.60	0.56	0.51	0.45	0.39	0.32	0.25	0.18	0.13	0.08
(VAC) 10"	9.78	192.2	1.02	0.91	0.81	0.76	0.71	0.66	0.62	0.55	0.48	0.40	0.33	0.26	0.20	0.14
(VAC) 5"	12.25	202.9	1.11	1.00	0.90	0.85	0.79	0.75	0.70	0.63	0.56	0.48	0.40	0.33	0.27	0.20
0 PSI	14.696	212.0	1.19	1.09	0.97	0.92	0.87	0.82	0.77	0.70	0.63	0.54	0.46	0.38	0.31	0.25
▶ .899	15.595	215.0	1.22	1.11	1.00	0.95	0.90	0.84	0.80	0.75	0.65	0.57	0.48	0.40	0.33	0.26
5	19.70	227.1	1.34	1.22	1.11	1.05	1.00	0.95	0.90	0.81	0.75	0.66	0.57	0.49	0.41	0.34
10	24.70	239.4	1.45	1.33	1.22	1.17	1.11	1.05	1.00	0.91	0.85	0.75	0.66	0.58	0.50	0.42
15	29.70	249.8	1.55	1.43	1.31	1.26	1.20	1.14	1.09	1.00	0.94	0.84	0.75	0.66	0.57	0.49
20	34.70	258.5	1.63	1.52	1.40	1.33	1.28	1.23	1.17	1.07	1.02	0.92	0.82	0.73	0.64	0.55
25	39.70	266.8	1.71	1.59	1.47	1.41	1.36	1.30	1.25	1.15	1.09	0.98	0.89	0.80	0.71	0.62
30	44.70	274.0	1.78	1.66	1.54	1.48	1.42	1.37	1.31	1.21	1.15	1.05	0.95	0.85	0.76	0.68
40	54.70	286.7	1.91	1.79	1.66	1.61	1.54	1.49	1.43	1.32	1.27	1.16	1.06	0.97	0.87	0.78
50	64.70	297.7	2.02	1.90	1.77	1.71	1.65	1.60	1.54	1.42	1.37	1.26	1.16	1.06	0.96	0.87
60	74.70	307.3	2.10	2.00	1.87	1.81	1.75	1.69	1.63	1.51	1.47	1.35	1.25	1.15	1.05	0.95
70	84.70	316.0	2.20	2.09	1.95	1.89	1.83	1.77	1.71	1.59	1.55	1.44	1.33	1.23	1.12	1.03
80	94.70	323.9	2.27	2.17	2.03	1.97	1.91	1.85	1.80	1.69	1.63	1.52	1.41	1.31	1.20	1.10
90	104.70	331.2	2.36	2.24	2.11	2.05	1.98	1.93	1.87	1.74	1.70	1.59	1.48	1.38	1.28	1.17
100	114.70	337.9	2.43	2.31	2.18	2.11	2.05	2.00	1.94	1.81	1.77	1.65	1.54	1.44	1.33	1.23
125	139.70	352.9	2.59	2.47	2.33	2.27	2.21	2.16	2.10	1.96	1.92	1.80	1.69	1.59	1.48	1.38
150	164.70	365.9	2.73	2.62	2.47	2.43	2.35	2.29	2.23	2.08	2.05	1.94	1.82	1.72	1.61	1.51
175	189.70	377.4	2.86	2.74	2.60	2.54	2.47	2.41	2.35	2.21	2.17	2.05	1.95	1.85	1.73	1.63
200	214.70	387.8	2.95	2.85	2.71	2.63	2.58	2.52	2.47	2.31	2.29	2.17	2.06	1.96	1.84	1.75

From Keenan and Keyes — Linear Interpolation. NOTE: Gauge pressure should be corrected for altitude.

Rate of pitch for steam ½"drop over 20-foot run.

Design Data

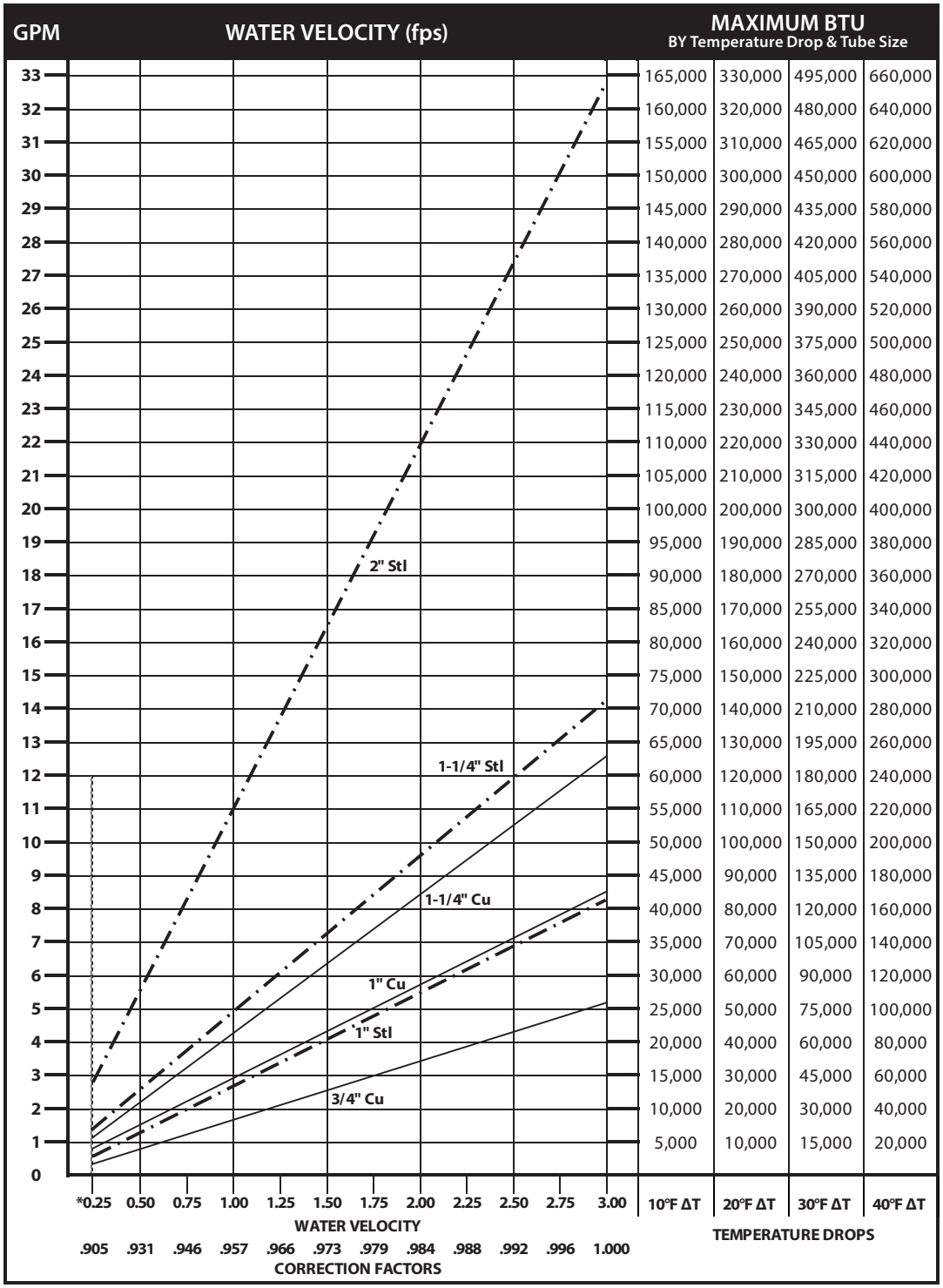

*Do not design below .25 fps.

DYNAMIC FORMULAS

BTU = GPM x 500 x TD

$$GPM = \left(\frac{BTU}{500}\right) \div TD$$

$$TD = \left(\frac{BTU}{500}\right) \div GPM$$

Pressure Drop at Given Water Velocities (Feet of Water per 100 ft. of pipe) based on Hazen - Williams calculation

Nominal Pipe Size	Water Velocity (ft/sec)											
	0.25	0.50	0.75	1.00	1.25	1.50	1.75	2.00	2.25	2.50	2.75	3.00
3/4" Copper	0.06	0.20	0.42	0.72	1.09	1.53	2.04	2.61	3.25	3.95	4.71	5.53
1" Copper	0.04	0.15	0.32	0.54	0.81	1.14	1.52	1.94	2.42	2.94	3.50	4.11
1 1/4" Copper	0.03	0.12	0.25	0.43	0.64	0.90	1.20	1.54	1.92	2.33	2.78	3.26
1" Steel	0.04	0.15	0.32	0.54	0.81	1.14	1.52	1.95	2.42	2.94	3.51	4.12
1 1/4" Steel	0.03	0.11	0.23	0.40	0.60	0.84	1.12	1.44	1.79	2.17	2.59	3.05
2" Steel	0.02	0.07	0.14	0.25	0.37	0.52	0.69	0.89	1.10	1.34	1.60	1.88

Design Data

GUARANTEED WORKING PRESSURES

1" IPS — 780 at Temperatures up to 650˚F.
1-1/4" IPS — 660 at Temperatures up to 650˚F.
2" IPS — 405 at Temperatures up to 650˚F.
1-1/4" CU — 194 at Temperatures up to 300˚F.
1" CU 204 at Temperatures up to 300˚F.
3/4" CU 218 PSI at Temperatures up to 300˚F.

MAXIMUM PRESSURES AT OTHER TEMPERATURES ARE AVAILABLE UPON REQUEST.

Pipe Water Capacities and Quantities Circulated at Velocity of 3 Feet Per Second

Nominal Pipe Size	Pipe I.D. (inches)	Gals Per Lin. Ft.	GPM @ 3' per sec Velocity
3/4" Copper	0.835	0.028	5.12
1" Copper	1.077	0.047	8.52
1 1/4" Copper	1.315	0.071	12.70
1" Steel	1.075	0.047	8.49
1 1/4" Steel	1.395	0.079	14.29
2" Steel	2.115	0.183	32.85

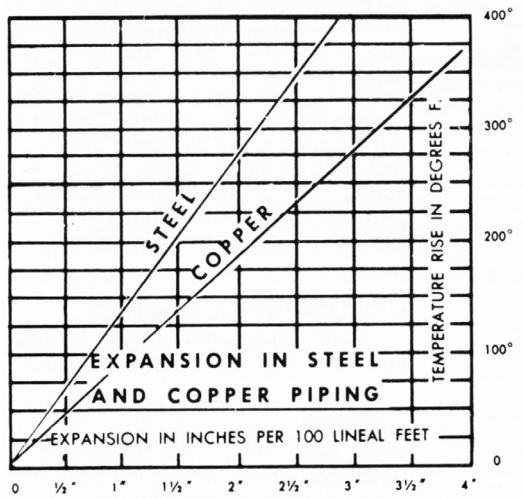

Glycol Correction Factors

Fluid Temperature 200°F

% Solution	Ethylene Glycol	Propylene Glycol
20	.952	.988
30	.921	.968
40	.888	.943
50	.852	.912

Fluid Temperature 180°F

% Solution	Ethylene Glycol	Propylene Glycol
20	.946	.982
30	.913	.961
40	.879	.934
50	.842	.902

Fluid Temperature 140°F

% Solution	Ethylene Glycol	Propylene Glycol
20	.934	.97
30	.898	.946
40	.861	.916
50	.821	.881

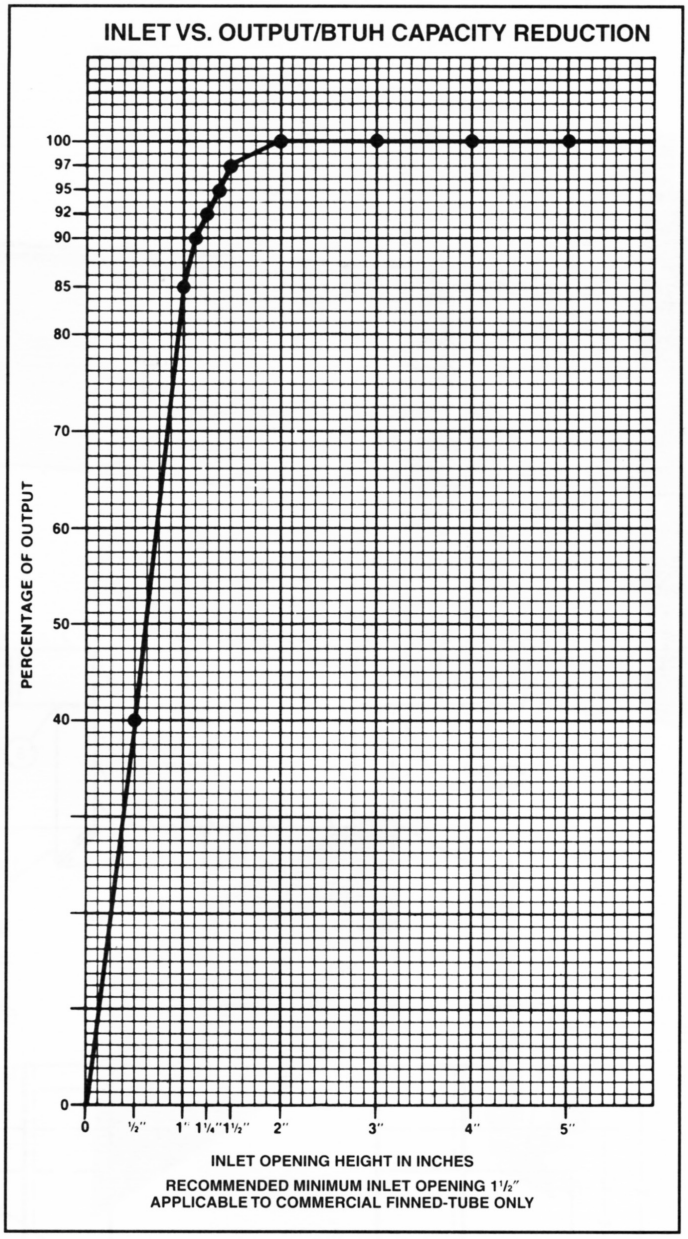

ALTITUDE FACTORS

Approximate factors for convective heat value at varying altitudes

Altitude	Ferrous Units	Copper Alum. Units
Sea Level	1.000	1,000
1,000 ft.	.984	.969
2,000 ft.	.968	.938
3,000 ft.	.952	.908
4,000 ft.	.936	.878
5,000 ft.	.920	.850
6,000 ft.	.904	.822
7,000 ft.	.889	.795
8,000 ft.	.874	.768
9,000 ft.	.859	.743
10,000 ft.	.844	.718
15,000 ft.	.771	.603
20,000 ft.	.703	.502